30 MAR 65

TM 11-6625-609-14

DEPARTMENT OF THE ARMY TECHNICAL MANUAL

EMTO LIBRARY

J-26

ORGANIZATIONAL, DS AND GS MAINTENANCE MANUAL

TEST SET, SIGNAL GENERATOR AN/GSM-21

ARC-H-16

HEADQUARTERS, DEPARTMENT OF THE ARMY

JANUARY 1965

AGO 7369A

This manual contains material provided by Aircraft Radio Corporation

TECHNICAL MANUAL
No. 11–6625–609–14

EMFO LIBRARY

HEADQUARTERS
DEPARTMENT OF THE ARMY
WASHINGTON, D.C., *29 January 1965*

ORGANIZATIONAL, DS AND GS

TEST SET, SIGNAL GENERATOR AN/GSM–21

		Paragraph	Page
CHAPTER 1.	INTRODUCTION		
	Scope	1	3
	Index of equipment publications	2	3
	Forms and records	3	3
2.	DESCRIPTION AND DATA		
	Purpose	4	4
	Characteristics	5	4
	Equipment supplied	6	4
3.	OPERATING INSTRUCTIONS		
	VOR audio generator phase accuracy check	7	5
	VOR audio generator on ARC type H–14A signal generator for phase accuracy check.	8	5
	Boonton Radio Corporation type 211–A signal generator phase for shift check	9	5
	Collins 479S signal generator for VOR phase accuracy check	10	6
4.	PREVENTIVE MAINTENANCE INSTRUCTIONS		
	Scope of maintenance	11	7
	Preventive maintenance	12	7
	Preventive maintenance checks and services periods	13	7
	Daily preventive maintenance checks and services chart	14	8
	Weekly preventive maintenance checks and services chart	15	8
	Monthly preventive maintenance checks and services chart	16	8
	Quarterly preventive maintenance checks and services chart	17	8
	Cleaning	18	9
	Touchup painting instructions	19	9
5.	EQUIPMENT FUNCTIONING		
	Functioning of AN/GSM–21	20	10
6.	MAINTENANCE INSTRUCTIONS		
	Equipment required	21	11
	Procedure	22	11
	Table of replaceable parts	23	11
APPENDIX I.	REFERENCES	--	12
II.	MAINTENANCE ALLOCATION	--	13
III.	BASIC ISSUE ITEMS LIST	--	17

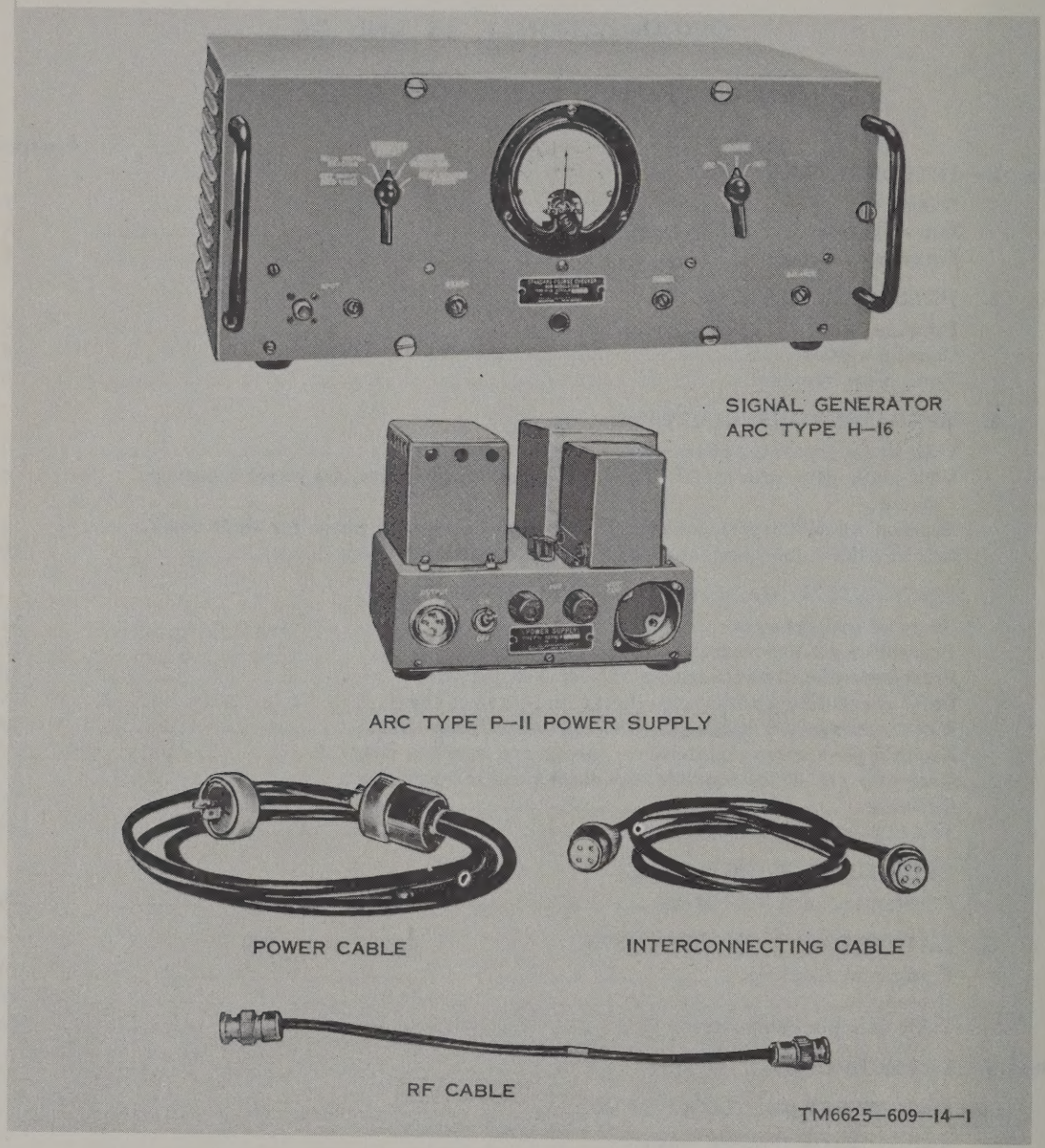

Figure 1. Test Set, signal generator AN/GSM-21.

CHAPTER 1
INTRODUCTION

1. Scope

a. This manual describes Test Set, Signal Generator AN/GSM–21 (fig. 1) and provides instructions for operation, and operator, organizational, direct support, and general support maintenance. It includes instructions for cleaning and inspection and for troubleshooting, testing, and repair of this equipment.

b. Throughout this manual, all references to the H–16 Standard Course Checker apply to Test Set, Signal Generator AN/GSM–21.

2. Index of Equipment Publications

Refer to the latest issue of DA Pam 310–4 to determine whether there are new editions, changes, or additional publications pertaining to the equipment. DA Pam 310–4 is an index of current technical manuals, technical bulletins, supply manuals (type 4, 6, 7, 8, and 9), supply bulletins (type CY), lubrication orders, and modification work orders available through publications supply channels. The index lists the individual parts (–10, –20, –35P, etc) and the latest changes to and revisions of each equipment publication.

3. Forms and Records

a. Report of Maintenance and Unsatisfactory Equipment. Use equipment forms and records in accordance with instructions in TM 38–750.

b. Report of Damaged or Improper Shipment. Fill out and forward DD Form 6 (Report of Damaged or Improper Shipment) as prescribed in AR 700–58 (Army), NAVSANDA Publication 378 (Navy), and AFR 71–4 (Air Force).

c. Reporting of Equipment Manual Improvements. The direct reporting, by the individual user, of errors, omissions, and recommendations for improving this manual is authorized and encouraged. DA Form 2028 (Recommended changes to DA Publications) will be used for reporting these improvements. This form will be completed by use of pencil, pen, or typewriter. DA Form 2028 will be completed in triplicate and forwarded by the individual using the manual. The original and one copy will be forwarded direct to: Commanding General, U. S. Army Electronics Command, ATTN: AMSEL–MR–MP–P, Fort Monmouth, N.J. 07703. One information copy will be furnished to the individual's immediate supervisor (officer, noncommissioned officer, supervisor, etc).

CHAPTER 2
DESCRIPTION AND DATA

4. Purpose

a. The H–16 Standard Course Checker provides a convenient means for precisely measuring the accuracy of the phase relationship between *reference phase* and *variable phase* modulations on VOR (omnirange) signal generators or modulators for the *courses* noted in *b* below.

b. The H–16 will check the following courses and indicate directly on the panel meter the amplitude and direction of the error up to a maximum of 4°:

(1) 0° TO (180° FROM).
(2) 15° TO (195° FROM).
(3) 180° TO (0° FROM).

5. Characteristics

a. Accuracy. With ±0.1° between 15° C. and 30° C. when indicated deviation is within ±1°. For ambient temperatures of −10° C. and +50° C., the instrument characteristically reads 0.1° high.

b. Self-Checking Feature. The inclusion of a self-checking circuit insures the long-term accuracy of the H–16.

c. Normal Input Level. At least 1.0 volt each of 30 cycles per second (cps) and 9,960 cps. Lower values may be used without appreciable sacrifice of zero course indication accuracy, but the direct-reading meter scale of degrees deviation will no longer be accurately direct reading.

d. Tube Types.
H–16—Six 5670.
P–11—One 6X4, two OB2WA.

e. Discriminator. Stable with time and ambient temperature of from −10° C. to +50° C.

f. Operation in High Humidity. The H–16 has been designed for reliable operation under prolonged conditions of high humidity and temperature. Because of the self-checking circuitry and the quality and treatment of components used, a measurement may be made almost immediately after tube warmup regardless of ambient temperature or humidity.

g. Input Power.
35 watts, 115 volts, 60 cps.
Input voltage may vary from 105 to 130 volts and frequency from 50 to 70 cps.

h. Dimensions.
H–16 (inches): 15⅜ wide x 10½ deep x 6¼ high.
P–11 (inches): 7⅛ wide x 5⅝ deep x 5⅝ high.

i. Weight.
H–16—11.7 pounds.
P–11—5.3 pounds.

6. Equipment Supplied

1—ARC 16320	Type H–16 Standard Course Checker with tubes and the following accessories:
1—ARC 16370	Type P–11 Power Supply with tubes.
1—ARC 14701	Cable Assembly (Power), 6 ft.
1—ARC 12802	Cable Assembly (4 Cond) 3 ft.
1—ARC 11369	Cable Assembly (RF), 6 ft.

CHAPTER 3
OPERATING INSTRUCTIONS

7. VOR Audio Generator Phase Accuracy Check

a. Connect H–16 to P–11 Power Supply and P–11 to 115-volt 60-cps power source with cables provided. Turn the power switch to ON.

b. Connect combined 0° TO (180° FROM) VOR modulation signal from audio generator to H–16 input. (The level of each of the 30-cps and 9,960-cps signals should be at least 1.0 volt to obtain proper redline adjustment.)

c. Turn the function switch to SET INPUT and the course switch to 0° COURSE TO. Adjust the INPUT potentiometer for redline meter indication.

d. Turn the function switch to NOTE METER READING and observe the meter reading.

e. Turn the function switch to EQUALIZE 9960 ~ and adjust the 9,960-cps potentiometer to obtain the same meter reading as noted in *d* above.

f. Turn the function switch to ADJUST PHASE-BAL and adjust PHASE potentiometer to obtain a 0° meter reading.

g. Turn the COURSE switch to 180°. If the meter does not read 0°, reduce the reading by one-half with the BALANCE potentiometer.

h. Return the COURSE switch to 0° and readjust the PHASE potentiometer to obtain a 0° meter reading.

i. Repeat the procedures given in *g* and *h* above.

j. Turn the function switch to READ COURSE ERROR and observe the meter reading, which is the phase error of the combined modulation. Alternatively, the phase of the combined modulation may be varied (or corrected) until the H–16 meter reads 0°, at which time the error is noted on the dial of the equipment under test. This latter method is more accurate for determining the magnitude of a large error provided no error exists in the dial of the equipment under test.

k. To determine the error of a 180° TO (0° FROM) VOR modulation signal, turn the COURSE switch to 180° and read the course error as before.

8. VOR Audio Generator on ARC Type H–14A Signal Generator for Phase Accuracy Check

a. Connect H–14A DEMOD output to H–16 input setting H–14A for standard omni signal, 0° TO course. The DEMOD potentiometer should be turned clockwise sufficiently to produce at least 1.0 volt of each signal.

b. Proceed as in paragraph 7.

c. To determine the error of the 15° (network in H–14A connected at switch position 15 and alternate positions around the azimuth), set the H–14A and the H–16 switches to position 15 and read the meter. The error in the network is the difference between this reading and the reading obtained in *j* above.

9. Boonton Radio Corporation Type 211–A Signal Generator Phase for Shift Check

a. Check the accuracy of the phase relationships in the audio generator that is to be used to modulate the 211–A; use the procedure described in paragraph 7.

b. Modulate the 211–A with the audio generator (30 percent of each signal) and connect the 211–A DEMOD OUT terminals marked GND and 20V to the H–16 input.

c. Proceed as in paragraph 7*c* to *i*.

d. Turn the function switch to READ COURSE ERROR and observe the meter reading. The difference between this reading and

the reading obtained in *a* above is the course shift in the 211–A.

e. To adjust the 211–A for zero shift, turn the 211–A phase adjustment as required to make the H–16 meter read the same as in *a* above while holding the percentage modulation constant with the MOD LEVEL control.

10. Collins 479S Signal Generator for VOR Phase Accuracy Check

a. Connect 479S MOD OUTPUT to H–16 input, set controls for combined 0° TO (180° FROM) VOR modulation signal. The level of the 30-cps and the 9,960-cps signals should be at least 1.0 volt.

b. Proceed as in paragraph 7.

Caution: **Do not turn on P–11 Power Supply without having the H–16 connected for a load.**

CHAPTER 4
PREVENTIVE MAINTENANCE INSTRUCTIONS

11. Scope of Maintenance

The maintenance duties assigned to the operator of Test Set, Signal Generator AN/GSM–21 are listed below together with a reference to the paragraphs covering the specific maintenance functions. The tools and test equipment required are listed in appendixes II and III.

a. Daily preventive maintenance checks and services (para. 14).

b. Weekly preventive maintenance checks and services (para. 15).

c. Monthly preventive maintenance checks and services (para. 16).

d. Quarterly preventive maintenance checks and services (para. 17).

e. Cleaning (para. 18).

f. Touchup painting (para. 19).

12. Preventive Maintenance

Preventive maintenance is the systematic care, servicing, and inspection of equipment to prevent the occurrence of trouble, to reduce downtime, and to assure that the equipment is serviceable.

a. Systematic Care. The procedures given in paragraphs 14 through 19 cover routine systematic care and cleaning essential to proper upkeep and operation of the equipment.

b. Preventive Maintenance Checks and Services. The preventive maintenance checks and services charts (paras. 14–17) outline functions to be performed at specific intervals. These checks and services are to maintain Army electronic equipment in a combat-serviceable condition; that is, in good general (physical) condition and in good operating condition. To assist operators in maintaining combat serviceability, the charts indicate what to check, how to check, and what the normal conditions are; the *references* column lists the illustrations, paragraphs, or manuals that contain detailed repair or replacement procedures. If the defect cannot be remedied by performing the corrective actions listed, a higher category of maintenance or repair is required. Records and reports of these checks and services must be made in accordance with the requirements set forth in TM 38–750.

13. Preventive Maintenance Checks and Services Periods

Preventive maintenance checks and services of the equipment are required daily, weekly, monthly, and quarterly.

a. Paragraph 14 specifies the checks and services that must be accomplished daily (or at least once each week if the equipment is maintained in standby condition).

b. Paragraphs 15, 16, and 17 specify *additional* checks and services that must be performed on a weekly, monthly, and quarterly basis, respectively.

14. Daily Preventive Maintenance Checks and Services Chart

Sequence No.	Item	Procedure	References
1	Completeness	See that the equipment is complete (fig. 1) (app. III).	None
2	Exterior surfaces	Clean the exterior surfaces, including the panel and meter glass (para 18). Check meter glass and indicator lens for cracks.	None
3	Connectors	Check the tightness of all connectors.	None
4	Controls and indicators	While making the operating checks (item 5), observe that the mechanical action of each knob and switch is smooth and free of external or internal binding, and that there is no excessive looseness. Also, check the meter for sticking or bent pointer.	None
5	Operation	Operate the equipment according to chapter 3.	None

15. Weekly Preventive Maintenance Checks and Services Chart

Sequence No.	Item	Procedure	References
1	Cables	Inspect cords, cables, and wires for chafed, cracked, or frayed insulation. Replace connectors that are broken, arcked, stripped, or worn excessively.	None
2	Handles and latches	Inspect handles, latches, and hinges for looseness. Replace or tighten as necessary.	None
3	Metal surfaces	Inspect exposed metal surfaces for rust and corrosion. Touchup paint as required (para 19).	None

16. Monthly Preventive Maintenance Checks and Services Chart

Sequence No.	Item	Procedure	References
1	Pluckout items	Inspect seating of pluckout items.	None
2	Jacks	Inspect jacks for snug fit and good contact.	None
3	Transformers	Inspect the transformers. All nuts must be tight. There should be no evidence of dirt or corrosion.	None
4	Terminal blocks	Inspect terminal blocks for loose connections and cracked or broken insulation.	None
5	Resistors and capacitors	Inspect resistors and capacitors for cracks, blistering, or other detrimental defects.	None

17. Quarterly Preventive Maintenance Checks and Services Chart

Sequence No.	Item	Procedure	References
1	Publications	See that all publications are complete, serviceable, and current.	DA Pam 310–4.
2	Modifications	Check DA Pam 310–4 to determine if new applicable MWO's have been published. All URGENT MWO's must be applied immediately. All NORMAL MWO's must be scheduled.	TM 38–750 and DA Pam 310–4.
3	Spare parts	Check all spare parts (operator and organizational) for general condition and method of storage. No overstock should be evident and all shortages must be on valid requisitions.	App. III.

18. Cleaning

Inspect the exterior of the equipment. The exterior surfaces should be clean, and free of dust, dirt, grease, and fungus.

a. Remove dust and loose dirt with a clean soft cloth.

***Warnings:* Cleaning compound is flammable and its fumes are toxic. Provide adequate ventilation. *Do not* use near a flame.**

b. Remove grease, fungus, and ground-in dirt from the cases; use a cloth dampened (not wet) with Cleaning Compound (Federal stock No. 7930–395–9542).

c. Remove dust or dirt from plugs and jacks with a brush.

***Caution:* Do not press on the meter face (glass) when cleaning; the meter may become damaged.**

d. Clean the front panels, meter, and control knobs; use a soft clean cloth. If necessary, dampen the cloth with water; mild soap may be used for more effective cleaning.

19. Touchup Painting Instructions

Remove rust and corrosion from metal surfaces by lightly sanding them with fine sandpaper. Brush two thin coats of paint on the bare metal to protect it from further corrosion. Refer to the applicable cleaning and refinishing practices specified in TM 9–213.

CHAPTER 5
EQUIPMENT FUNCTIONING

20. Functioning of AN/GSM–21

a. The modulation on VOR (Omnirange) Signal Generators has two components. One is 9,960-cps frequency modulated at a 30-cps rate, and is called the *reference phase* modulation. The other is a 30-cps audio frequency known as the *variable phase* modulation.

b. 0° TO or 180° FROM, the phase difference between the *reference phase* and the *variable phase* should be 180°. The H–16 Standard Course Checker measures the accuracy of this phase relationship as follows: the combined 0° TO modulation signal is applied to the INPUT connector on the H–16. When the function switch is thrown to SET INPUT position, and the course switch to 0° position, the *variable* signal is fed only through the *variable* channel. The INPUT potentiometer is then adjusted until the level of the *variable* signal is such that full scale deflection of the meter is obtained. This indicates that the signal level in the *variable* channel is correct.

c. When the function switch is in the NOTE METER READING position, the *variable* signal is fed through the *reference* channel, and the output voltage of this channel is merely noted.

d. When the function switch is in the EQUALIZE 9,960 ~ position, the *reference* signal is fed through the *reference* channel. The *reference* signal level is set by the 9,960 cps potentiometer to give the same meter readings as in the preceding step. This is done so that the calibrating and measuring levels in the *reference* channel will be the same. Consequently, no small phase errors will be introduced as a result of using different levels.

e. When the function switch is in the ADJUST PHASE-BAL position, the *variable* signal is fed into both channels and any phase change that may have occurred as a result of time, temperature, level, etc, is compensated for by adjustment of the PHASE potentiometer. With the switch in this position, the BALANCE potentiometer may also be properly set by use of the 0° and 180° positions of the COURSE switch.

f. When the function switch is in the READ COURSE ERROR position, the *reference* and *variable* signals are fed into their respective channels, and since the proper levels and phase relationship between the channels have been established by the preceding operation, any phase difference between them may be attributed to the signal generator being checked.

CHAPTER 6
MAINTENANCE INSTRUCTIONS

21. Equipment Required

a. Ballantine Model 300 VTVM or equivalent.

b. 20,000 ohms-per-volt DC meter.

c. General Radio Model 200-C Variac.

22. Procedure

A defective component may be readily tracked down by checking circuit voltages indicated on schematic diagrams.

a. If the VAR LEVEL potentiometer becomes defective, replace and adjust it to the same setting as before, or to a setting which produces a ±4 course error indication on the meter when the input course is changed ±4.

b. If the CAL LEVEL potentiometer becomes defective, replace and adjust it to give the same voltage on NOTE METER READING position as was obtained when the instrument was operating normally.

c. If the phase adjustment gradually goes out of range of the PHASE potentiometer after the equipment has been in use for some time, one or more components in the 30-cps portion of the *reference* channel or in the *variable* channel have changed value with age. Replace C–113 with a value of capacity that will bring the potentiometer adjustment back into range.

d. If the phase adjustment suddenly goes out of range of the PHASE potentiometer, a tube or some other component has become defective, and must be located and replaced.

e. If the BALANCE potentiometer goes out of range of adjustment, replace both CR105 and CR106. Generally, replacement of both of these rectifiers is necessary, since they are matched for equal output.

f. Any component may be replaced by an equivalent part except discriminator Z101, and CAL PHASE potentiometer R140. The H–16 should be returned to the factory for replacement or adjustment of these items.

23. Table of Replaceable Parts

Figures 3 and 5 each includes a SYMBOL IDENTIFICATION TABLE which lists all normally replaceable parts for the H–16 and the P–11 respectively.

APPENDIX I

REFERENCES

DA Pam 310–4	Index of Technical Manuals, Technical Bulletins, Supply Manuals (Types 4, 6, 7, 8, and 9), Supply Bulletins, Lubrication Orders, and Modification Work Orders.
TM 9–213	Painting Instructions for Field Use.
TM 38–750	Army Equipment Record Procedures.

APPENDIX II
MAINTENANCE ALLOCATION

Section I. INTRODUCTION

1. General

a. This appendix assigns maintenance functions to be performed on components, assemblies, and subassemblies by the lowest appropriate maintenance category.

b. Columns in the maintenance allocation chart are as follows:

(1) *Part or component.* This column shows only the nomenclature or standard item name. Additional descriptive data are included only where clarification is necessary to identify the component. Components, assemblies, and subassemblies are listed in top-down order. That is, the assemblies which are part of a component are listed immediately below that component, and the subassemblies which are part of an assembly are listed immediately below that assembly. Each generation breakdown (components, assemblies, or subassemblies) is listed in disassembly order or alphabetical order.

(2) *Maintenance function.* This column indicates the various maintenance functions allocated to the categories.

(*a*) *Service.* To clean, to preserve, and to replenish lubricants.

(*b*) *Adjust.* To regulate periodically to prevent malfunction.

(*c*) *Inspect.* To verify serviceability and to detect incipient electrical or mechanical failure by scrutiny.

(*d*) *Test.* To verify serviceability and to detect incipient electrical or mechanical failure by use of special equipment such as gages, meters, etc.

(*e*) *Replace.* To substitute serviceable components, assemblies, or subassemblies, for unserviceable components, assemblies, or subassemblies.

(*f*) *Repair.* To restore an item to serviceable condition through correction of a specific failure or unserviceable condition. This function includes but is not limited to welding, grinding, riveting, straightening, and replacement of parts other than the trial and error replacement of running spare type items such as fuses, lamps, or electron tubes.

(*g*) *Align.* To adjust two or more components of an electrical system so that their functions are properly synchronized.

(*h*) *Calibrate.* To determine, check, or rectify the graduation of an instrument, weapon, or weapons system, or components of a weapons system.

(*i*) *Overhaul.* To restore an item to *completely serviceable* condition as prescribed by serviceability standards. This is accomplished through employment of the technique of "Inspect and Repair Only as Necessary" (IROAN). Maximum utilization of diagnostic and test equipment is combined with minimum disassembly of the item during the overhaul process.

(*j*) *Rebuild.* To restore an item to a standard as near as possible to original or new condition in appearance, performance, and life expectancy. This is accomplished through the maintenance technique of complete disassembly of the item,

inspection of all parts or components, repair or replacement of worn or unserviceable elements using original manufacturing tolerances and/or specifications and subsequent reassembly of the item.

(3) *Operator, organizational, direct support, general support and depot maintenance levels.* The symbol X indicates the categories responsible for performing that particular maintenance operation, but does not necessarily indicate that repair parts will be stocked at that level. Categories higher than those marked by X are authorized to perform the indicated operation.

(4) *Tools required.* This column indicates codes assigned to each individual tool equipment, test equipment, and maintenance equipment referenced. The grouping of codes in this column of the maintenance allocation chart indicates the tool, test, and maintenance equipment required to perform the maintenance function.

(5) *Remarks.* Entries in this column will be utilized when necessary to clarify any of the data cited in the preceding columns.

c. Columns in the allocation of tools for maintenance functions are as follows:

(1) *Tools required for maintenance functions.* This column lists tools, test, and maintenance equipment required to perform the maintenance functions.

(2) *Operator, organizational, direct support, general support, and depot maintenance levels.* The dagger (†) symbol in these columns indicates the categories normally allocated the facility.

(3) *Tool code.* This column lists the tool code assigned.

2. Maintenance by Using Organizations

When this equipment is used by signal services organizations organic to theater headquarters or communication zones to provide theater communications, those maintenance functions allocated up to and including general support are authorized to the organization operating this equipment.

SECTION II MAINTENANCE ALLOCATION CHART

PART OR COMPONENT	MAINTENANCE FUNCTION	ECHELON O/C	O	DS	GS	D	TOOLS REQUIRED	REMARKS
TEST SET, SIGNAL GENERATOR AN/GSM-21	inspect		X					
	test		X				7	
					X		1, 2, 3, 5	
	repair		X					Replace components
					X		6	
CABLE ASSEMBLIES	inspect		X					
	test		X				7	
					X		1	
	repair				X		6	
POWER SUPPLY ARC TYPE P-11 (ARC #16370)	inspect		X					
	test		X				7	
					X		1, 2, 5	
	repair				X		6	
STANDARD COURSE CHECKER (ARC #16320)	inspect		X					
	test		X				7	
					X		1, 2, 3, 5	
	repair				X		6	
	overhaul					X	1, 2, 3, 4, 6	

SECTION III. ALLOCATION OF TOOLS FOR MAINTENANCE FUNCTIONS

TOOLS REQUIRED FOR MAINTENANCE FUNCTIONS	ECHELON					TOOL CODE	REMARKS
	O/C	O	DS	GS	D		
AN/GSM-21 (continued)							
MULTIMETER TS-352/U				†	†	1	
MULTIMETER, METER ME-26/U				†	†	2	
OSCILLOSCOPE AN/USM-81				†	†	3	
TEST SET, ELECTRON TUBE TV-2/U					†	4	
TEST SET, ELECTRON TUBE TV-7/U				†		5	
TOOL KIT, ELECTRONIC EQUIPMENT TK-100/G				†	†	6	
TOOLS AND TEST EQUIPMENT NORMALLY AVAILABLE TO THE REPAIRMAN-MAN-USER BECAUSE OF HIS ASSIGNED MISSION		†				7	

Army-Ft Monmouth,NJ MON 1066-64

APPENDIX III
BASIC ISSUE ITEMS LIST

Section I. INTRODUCTION

1. General

This appendix lists items supplied for initial operation. The list includes tools, parts, and material issued as part of the major end item. The list includes all items authorized for basic operator maintenance of the equipment. End items of equipment are issued on the basis of allowances prescribed in equipment authorization tables and other documents that are a basis for requisitioning.

2. Column

Columns are as follows:

a. Federal Stock Number. This column lists the 11-digit Federal stock number.

b. Designation by Model. Not used.

c. Description. Nomenclature or the standard item name and brief identifying data for each item are listed in this column. When requisitioning, enter the nomenclature and description.

d. Unit of Issue. The unit of issue is each unless otherwise indicated and is the supply term by which the individual item is counted for procurement, storage, requisitioning, allowances, and issue purposes.

e. Expendability. Nonexpendable items are indicated by NX. Expendable items are not annotated.

f. Quantity Authorized. Under "Items Comprising an Operable Equipment", the column lists the quantity of items supplied for the initial operation of the equipment.

g. Illustration. The "figure No." column lists the figure and reference numbers used for identification of the items in the illustration.

FEDERAL STOCK NUMBER	DESIGNATION BY MODEL	DESCRIPTION	UNIT OF ISSUE	EXP	QTY AUTH	ILLUSTRATION	
						FIGURE NO.	ITEM NO.
		TEST SET, SIGNAL GENERATOR AN/GSM-21 L4AB42-1		NX			
		TECHNICAL MANUAL TM11-6625-609-14			2		
		ITEMS COMPROSING AN OPERABLE EQUIPMENT					
		STANDARD COURSE CHECKER ARC part No. 16320		NX	1	1	
		POWER SUPPLY: ARC type P-11, part No. 16370		NX	1	1	
		CABLE ASSEMBLY, POWER, ELECTRICAL: 6 ft lg; ARC part No. 14701			1	1	
		CABLE ASSEMBLY, SPECIAL PURPOSE, ELECTRICAL; 4 cond; 3 ft lg; ARC part No. 12802			1	1	
		CABLE ASSEMBLY, RADIO FREQUENCY: ARC part No. 11369 (6ft)			1	1	
		RUNNING SPARE ITEMS No Parts Authorized for Stockage at Operators Level					

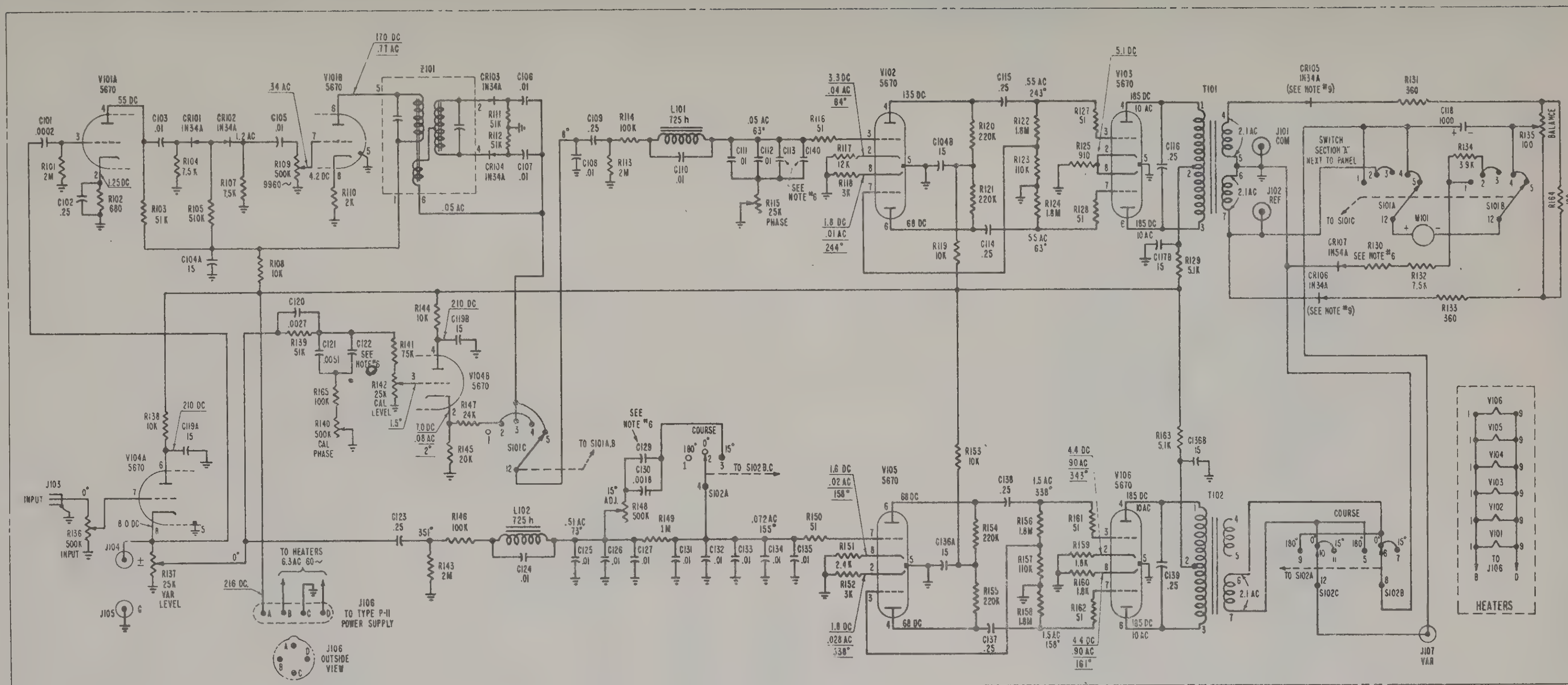

NOTES:

1 FOR WIRING DIAGRAM SEE DRAWING #16321.

2. FOR ASSEMBLY SEE DRAWING #16320.

3. FOR SCHEMATIC DIAGRAM OF TYPE P-11 POWER SUPPLY SEE DRAWING #16372

4 CAPACITOR VALUES ARE IN MICROFARADS (μf) UNLESS OTHERWISE NOTED.

5 RESISTOR VALUES ARE IN OHMS. MULTIPLIERS: K=1000 , M=1,000,000.

6. VALUES OF THE FOLLOWING COMPONENTS ARE SELECTED AND INSTALLED AT THE TIME OF FINAL ADJUSTMENT

SYMBOL	LIMITING VALUES	PURPOSE
C113	1300-7500 $\mu\mu f$	0°
C122	4300-6200 $\mu\mu f$	CAL PHASE
C129	0-200 $\mu\mu f$	15°
C140	0-510 $\mu\mu f$	0°
R130	0-2.7K OHMS	METER SENSITIVITY

7. VOLTAGE VALUES PRECEDING "DC" OR "AC" ARE APPROXIMATE, AND ARE BASED ON THE FOLLOWING CONDITIONS:

(a) ONE TERMINAL OF VOLTMETER GROUNDED TO CHASSIS EXCEPT WHERE A DIFFERENT CONNECTION IS INDICATED.

(b) SUPPLY VOLTAGES AS SHOWN AT J106.

(c) SIGNAL INPUT AT J103 IS "ZERO COURSE" AND LEVEL ADJUSTMENTS HAVE BEEN MADE AT POSITIONS 1,2 & 3 OF S101

(d) SWITCH POSITIONS: S101 ON 5 AND S102 ON 0°.

(e) DC VOLTAGES ARE POSITIVE AND MEASURED WITH A 20,000 OHMS-PER-VOLT DC METER

(f) AC VOLTAGES ARE MEASURED WITH A BALLANTINE MODEL 300 VOLTMETER

NOTES:(CONT'D)

8. PHASE ANGLES OF VARIOUS 30 CPS VOLTAGES (SHOWN IN DEGREES LAG) ARE APPROXIMATE VALUES WITH RESPECT TO THE VOLTAGE AT INPUT.

9. CRYSTAL RECTIFIERS CR105 AND CR106 ARE MATCHED FOR EQUAL OUTPUT

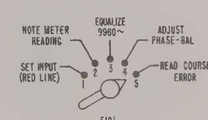

S101
FUNCTION SWITCH
(3 SECTION)

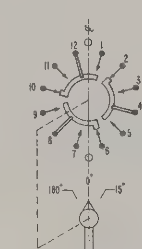

S102
COURSE SWITCH
(SINGLE SECTION)

RECORD OF HIGHEST SYMBOL NUMBER	
CATEGORY	NUMBER
C	140
CR	107
J	107
L	102
M	101
R	165
S	102
T	102
V	106
Z	101

TM6625-609-14-2

Figure 2. Signal generator ARC type H–16, schematic diagram.

Figure 3. Signal Generator ARC type H–16, wiring diagram.
(Located in back of manual)

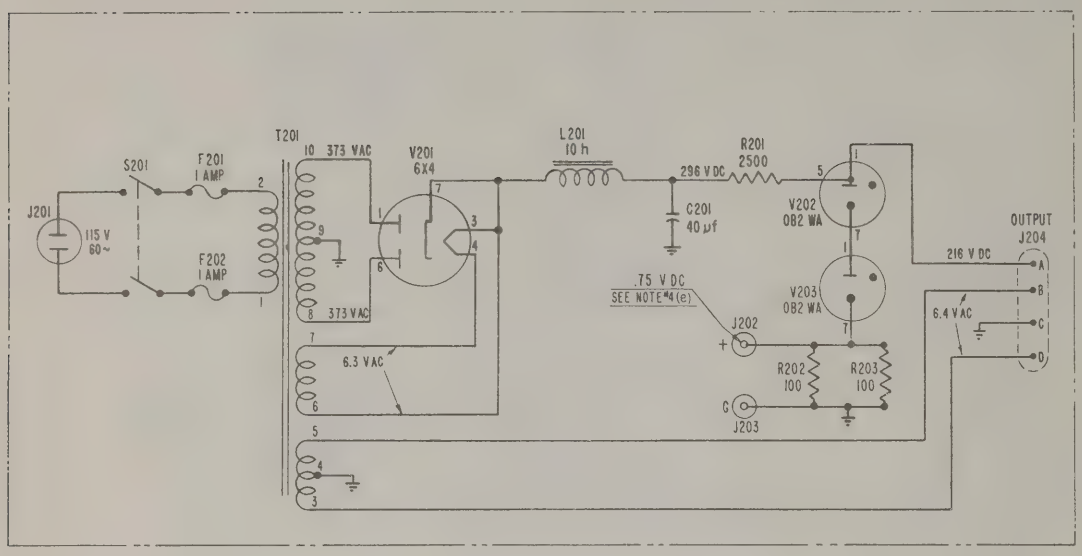

J204
OUTSIDE VIEW

RECORD OF HIGHEST SYMBOL NUMBER	
CATEGORY	NUMBER
C	201
F	202
J	204
L	201
R	203
S	201
T	201
V	203

NOTES :
1. FOR WIRING DIAGRAM SEE DRAWING #16371.
2. FOR ASSEMBLY SEE DRAWING #16370.
3. ALL RESISTOR VALUES ARE IN OHMS.
4. DC AND AC VOLTAGES ARE APPROXIMATE AND ARE BASED ON THE FOLLOWING CONDITIONS.
   (a) ONE TERMINAL OF VOLTMETER GROUNDED TO CHASSIS EXCEPT WHERE A DIFFERENT CONNECTION IS INDICATED.
   (b) SUPPLY VOLTAGE AS SHOWN AT J201.
   (c) OUTPUT LOADS (J204): 17 ma DC FROM A TO C AND 2.45 a AC FROM B TO D.
   (d) DC VOLTAGES ARE MEASURED WITH A 20,000 OHMS-PER VOLT DC METER.
   (e) A RANGE OF .25 TO 1.5 V DC AT J202 MAY BE EXPECTED FOR A SUPPLY VOLTAGE RANGE OF 105 TO 130 V.

TM6625-609-14-4

Figure 4. Power supply ARC type P–11, schematic diagram.

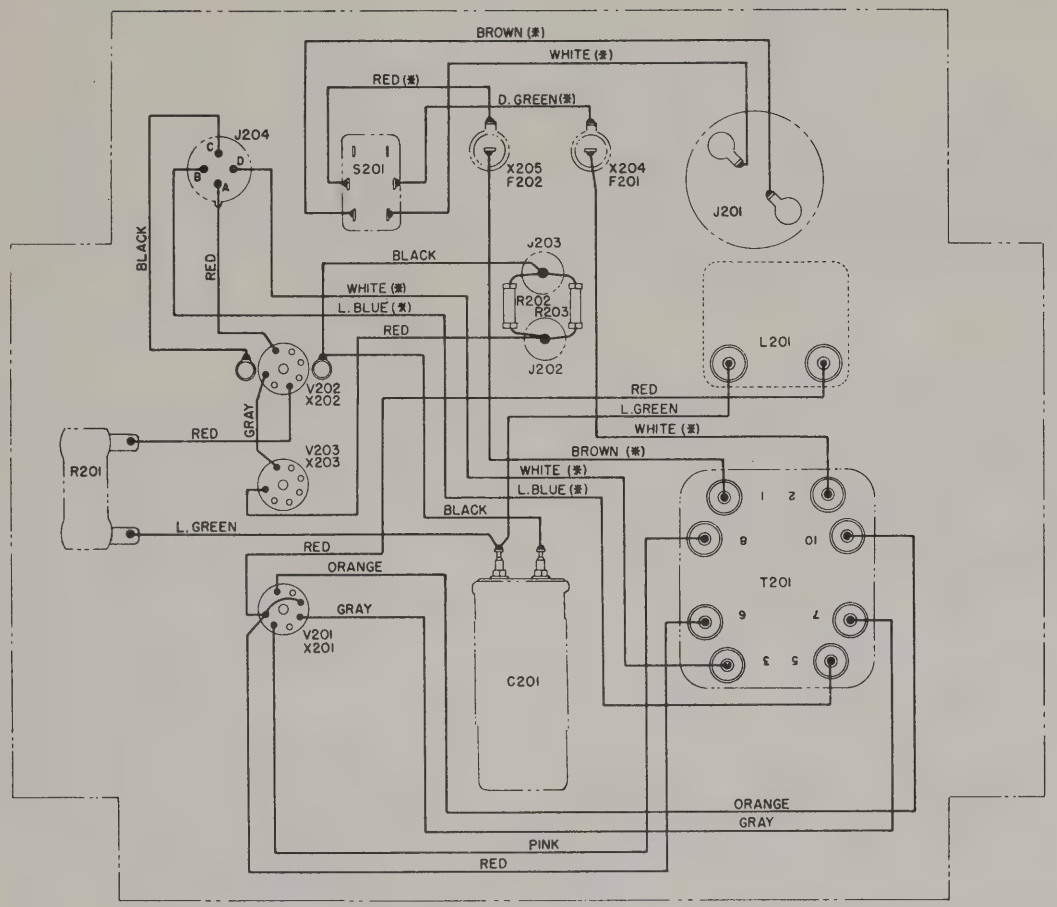

SYMBOL IDENTIFICATION TABLE MULTIPLIERS FOR RESISTANCE VALUES K=1,000 M=1,000,000		
SYMBOL NO.	DRAWING NO.	DESCRIPTION
C201	12877	40 μf
F201	8628	FUSE
F202	8628	FUSE
J201	14714	PLUG BASE
J202	13152	JACK (RED)
J203	12921	JACK (BLACK)
J204	12425	RECEPTACLE (KEY C)
L201	16351	CHOKE
R201	8623	2500 OHMS
R202	205	100 OHMS
R203	205	100 OHMS
S201	8085	SWITCH
T201	16368	TRANSFORMER
V201	6X4	VACUUM TUBE
V202	0B2WA	VACUUM TUBE
V203	0B2WA	VACUUM TUBE
X201	11581	SOCKET, 7 PIN
X202	11581	SOCKET, 7 PIN
X203	11581	SOCKET, 7 PIN
X204	8170	FUSE HOLDER
X205	8170	FUSE HOLDER

NOTES:

1. FOR SCHEMATIC DIAGRAM SEE DRAWING #16372.
2. FOR ASSEMBLY SEE DRAWING #16370.
3. ALL WIRES MARKED WITH COLOR NOTE ONLY ARE #22 SOLID COPPER (SPEC. #9275).
4. WIRES MARKED WITH COLOR NOTE AND (*) ARE #18 STRANDED COPPER (SPEC. #9273).
5. ALL UNMARKED WIRES ARE #22 BARE, TINNED, SOLID COPPER.
6. KEEP A "MINIATURE SOCKET WIRING PLUG" IN EACH OF THE MINIATURE SOCKETS THROUGHOUT THE WIRING OPERATION.

TM6625-609-14-5

Figure 5. Power supply ARC type P–11, wiring diagram.

By Order of the Secretary of the Army:

HAROLD K. JOHNSON,
General, United States Army,
Chief of Staff.

Official:

J. C. LAMBERT,
Major General, United States Army,
The Adjutant General.

Distribution:

Active Army:

USASA (2)
CNGB (1)
CC–E (7)
Directorate of Transportation (1)
CofEngrs (1)
TSG (1)
CofSptS (1)
USAMC (5)
USAMICOM (4)
USASMC (2)
USACDCEA (1)
USACDCCBRA (1)
USACDCCEA (1)
USACDCCEA, Monmouth Ofc (1)
USACDCOA (1)
USACDCQMA (1)
USACDCTA (1)
USACDCADA (1)
USACDCARMA (1)
USACDCAVNA (1)
USADCARTYA (1)
USACDCSWA (1)
USASCC (4)
USCONARC (5)
ARADCOM (2)
ARADCOM Rgn (2)
OS Maj Comd (3)
LOGCOMD (2)
MDW (1)
Armies (2)
Corps (2)
USAC (3)
11th Air Aslt Div (3)
Svc Colleges (2)
Br Svc Sch (2)
Instl (2) except
Ft Monmouth (70)
Ft Hancock (4)
Ft Gordon (5)
Ft Huachuca (10)
WSMR (5)
USATC Armor (2)
USATC Engr (2)
USATC Inf (2)
USASTC (3)
Gen Dep (2)
Sig Sec, Gen Dep (5)
Sig Dep (12)
Army Dep (2) except
Lexington-Blue Grass Army Dep (14)
SAAD (30)
TOAD (14)
FTWOAD (10)
LEAD (5)
SHAD (3)
NAAD (5)
SVAD (5)
CHAD (3)
ATAD (4)
WRAMC (1)
USA Tml Comd (1)
Army Tml (1) except OART (5)
Army Pic Cen (2)
POE (1)
Sig Fld Maint Shops (2)
AMS (1)
USAERDAA (2)
USAERDAW (13)
Units org under fol TOE:
2 ea. UNOINDC
11–16
11–57
11–97
11–98
11–117
11–155
11–157
11–500(AA–AE) (4)
11–557
11–587
11–592
11–597

NG: None.

USAR: None.

For explanation of abbreviations used, see AR 320–50.

☆ U. S. GOVERNMENT PRINTING OFFICE: 1965—750580

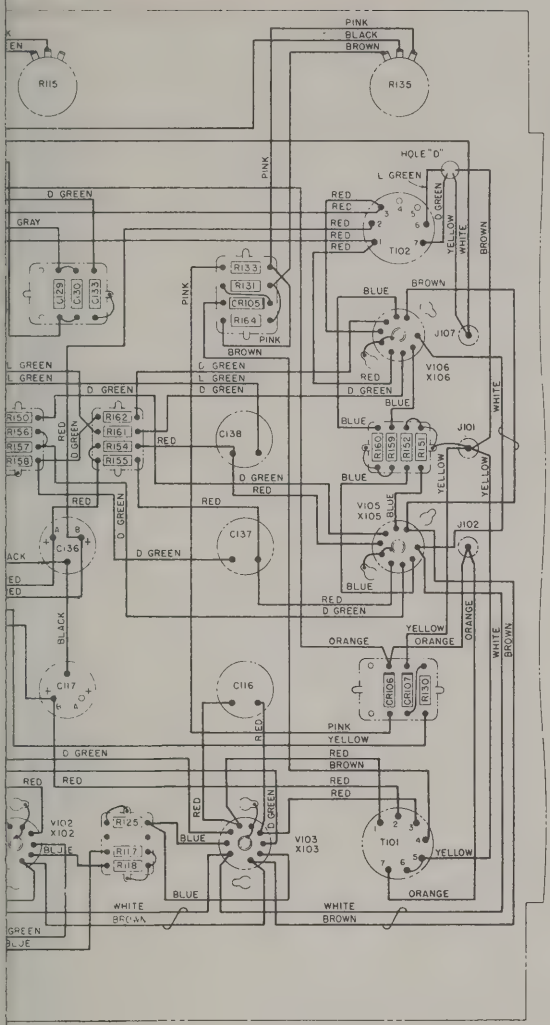

SYMBOL IDENTIFICATION TABLE

MULTIPLIERS FOR RESISTANCE VALUES: K=1000 M=1,000,000

SYMBOL NO	DRAWING NO	DESCRIPTION	SYMBOL NO	DRAWING NO	DESCRIPTION
C101	8617	200 MMF	R133	205	360 OHMS
C102	12709	25 MF	R134	201	39K OHMS
C103	8618	10,000 MMF	R135	8579	0-100 OHMS
C104A	13928	.15 MF	R136	8247	0-50K OHMS
C104B		15 MF	R137	8467	0-75K OHMS
C105	8618	10,000 MMF	R138	201	10K OHMS
C106	8618	10,000 MMF	R139	201	51K OHMS
C107	8618	10,000 MMF	R140	8247	0-500K OHMS
C108	8618	10,000 MMF	R141	201	75K OHMS
C109	12709	25 MF	R142	8467	0-75K OHMS
C110	8618	10,000 MMF	R143	201	2M OHMS
C111	8618	10,000 MMF	R144	201	10K OHMS
C112	8618	10,000 MMF	R145	201	20K OHMS
C113	8618	SEE NOTE #3	R146	205	100K OHMS
C114	12709	25 MF	R147	201	24K OHMS
C115	12709	25 MF	R148	8247	0-500K OHMS
C116	13163	25 MF	R149	205	M OHMS
C117A	13928	.15 MF	R150	201	51 OHMS
C117B		15 MF	R151	201	2.4K OHMS
C118	16143	1000 MF	R152	201	3K OHMS
C119A	13928	.15 MF	R153	201	10K OHMS
C119B		15 MF	R154	201	220K OHMS
C120	8618	2700 MMF	R155	201	220K OHMS
C121	8618	5100 MMF	R156	201	1.8M OHMS
C122	8618	SEE NOTE #3	R157	201	110K OHMS
C123	12709	25 MF	R158	201	1.8M OHMS
C124	8618	10,000 MMF	R159	201	1.8K OHMS
C125	8618	10,000 MMF	R160	201	1.8K OHMS
C126	8618	10,000 MMF	R161	201	51 OHMS
C127	8618	10,000 MMF	R162	201	51 OHMS
			R163	201	3.1K OHMS
C129	8617	SEE NOTE #3	R164	75	0J OHMS
C130	8618	1800 MMF	R165	201	100K OHMS
C131	8618	10,000 MMF			
C132	8618	10,000 MMF			
C133	8618	10,000 MMF	CR101	15534	IN34A RECTIFIER
C134	8618	10,000 MMF	CR102	15534	IN34A RECTIFIER
C135	8618	10,000 MMF	CR103	15534	IN34A RECTIFIER
C136A	13928	.15 MF	CR104	15534	IN34A RECTIFIER
C136B		15 MF	CR105	13910	IN34A
C137	12709	.25 MF	CR106		MATCHED PAIR
C138	12709	.25 MF	CR107	16326	IN54A RECTIFIER
C139	15763	.25 MF			
C140	8617/8630	SEE NOTE #3			
			J101	12921	TEST JACK
			J102	13152	TEST JACK
R101	201	2M OHMS	J103	11338	UG-290/U
R102	201	680 OHMS	J104	13152	TEST JACK
R103	201	51K OHMS	J105	12921	TEST JACK
R104	201	7.5K OHMS	J106	12425	RECEPTACLE ASSEM
R105	201	510K OHMS	J107	13152	TEST JACK
R107	201	7.5K OHMS	L101	16313	FILTER CHOKE (125A)
R108	201	10K OHMS	L102	16313	FILTER CHOKE (125A)
R109	8247	0-500K OHMS			
R110	201	2K OHMS	M101	16312	METER
R111	201	51K OHMS			
R112	201	51K OHMS	S101	16311	5 POSITION 3 SECTION
R113	201	2M OHMS	S102	16314	3 POSITION, 4 SECTION
R114	205	100K OHMS			
R115	8467	25K OHMS	T101	16389	TRANSFORMER
R116	201	51 OHMS	T102	16389	TRANSFORMER
R117	201	12K OHMS			
R118	201	3K OHMS	V101	5670	VACUUM TUBE
R119	201	10K OHMS	V102	5670	VACUUM TUBE
R120	201	220K OHMS	V103	5670	VACUUM TUBE
R121	201	220K OHMS	V104	5670	VACUUM TUBE
R122	201	1.8M OHMS	V105	5670	VACUUM TUBE
R123	201	110K OHMS	V106	5670	VACUUM TUBE
R124	201	1.8M OHMS			
R125	201	910 OHMS	X101	15230	9 PIN SOCKET
			X102	15230	9 PIN SOCKET
R127	201	51 OHMS	X103	15230	9 PIN SOCKET
R128	201	51 OHMS	X104	15230	9 PIN SOCKET
R129	201	5.1K OHMS	X105	15230	9 PIN SOCKET
R130	201	SEE NOTE #3	X106	15230	9 PIN SOCKET
R131	205	360 OHMS			
R132	201	7.5K OHMS	Z101	15376	DISCRIMINATOR ASSEM

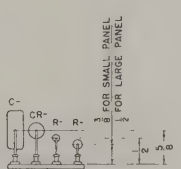

LOCATION OF COMPONENTS ON RESISTOR PANELS.

TM6625-609-14-3

diagram.

Figure 3.

By Order of the Secretary of the Army:

HAROLD K. JOHNSON,
General, United States Army,
Chief of Staff.

Official:

J. C. LAMBERT,
Major General, United States Army,
The Adjutant General.

Distribution:

Active Army:

USASA (2)
CNGB (1)
CC–E (7)
Directorate of Transportation (1)
CofEngrs (1)
TSG (1)
CofSptS (1)
USAMC (5)
USAMICOM (4)
USASMC (2)
USACDCEA (1)
USACDCCBRA (1)
USACDCCEA (1)
USACDCCEA, Monmouth Ofc (1)
USACDCOA (1)
USACDCQMA (1)
USACDCTA (1)
USACDCADA (1)
USACDCARMA (1)
USACDCAVNA (1)
USADCARTYA (1)
USACDCSWA (1)
USASCC (4)
USCONARC (5)
ARADCOM (2)
ARADCOM Rgn (2)
OS Maj Comd (3)
LOGCOMD (2)
MDW (1)
Armies (2)
Corps (2)
USAC (3)
11th Air Aslt Div (3)
Svc Colleges (2)
Br Svc Sch (2)
Instl (2) except
  Ft Monmouth (70)
  Ft Hancock (4)
  Ft Gordon (5)
  Ft Huachuca (10)
  WSMR (5)
USATC Armor (2)
USATC Engr (2)
USATC Inf (2)
USASTC (3)
Gen Dep (2)
Sig Sec, Gen Dep (5)
Sig Dep (12)
Army Dep (2) except
  Lexington-Blue Grass Army Dep (14)
  SAAD (30)
  TOAD (14)
  FTWOAD (10)
  LEAD (5)
  SHAD (3)
  NAAD (5)
  SVAD (5)
  CHAD (3)
  ATAD (4)
WRAMC (1)
USA Tml Comd (1)
Army Tml (1) except OART (5)
Army Pic Cen (2)
POE (1)
Sig Fld Maint Shops (2)
AMS (1)
USAERDAA (2)
USAERDAW (13)
Units org under fol TOE:
  2 ea. UNOINDC
  11–16
  11–57
  11–97
  11–98
  11–117
  11–155
  11–157
  11–500(AA–AE) (4)
  11–557
  11–587
  11–592
  11–597

NG: None.

USAR: None.

For explanation of abbreviations used, see AR 320–50.

☆ U. S. GOVERNMENT PRINTING OFFICE: 1965—750580

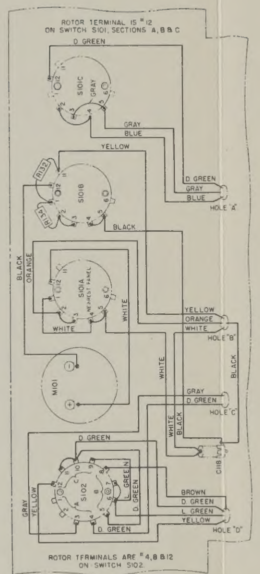

WIRING OF FRONT PANEL
VIEWED FROM REAR

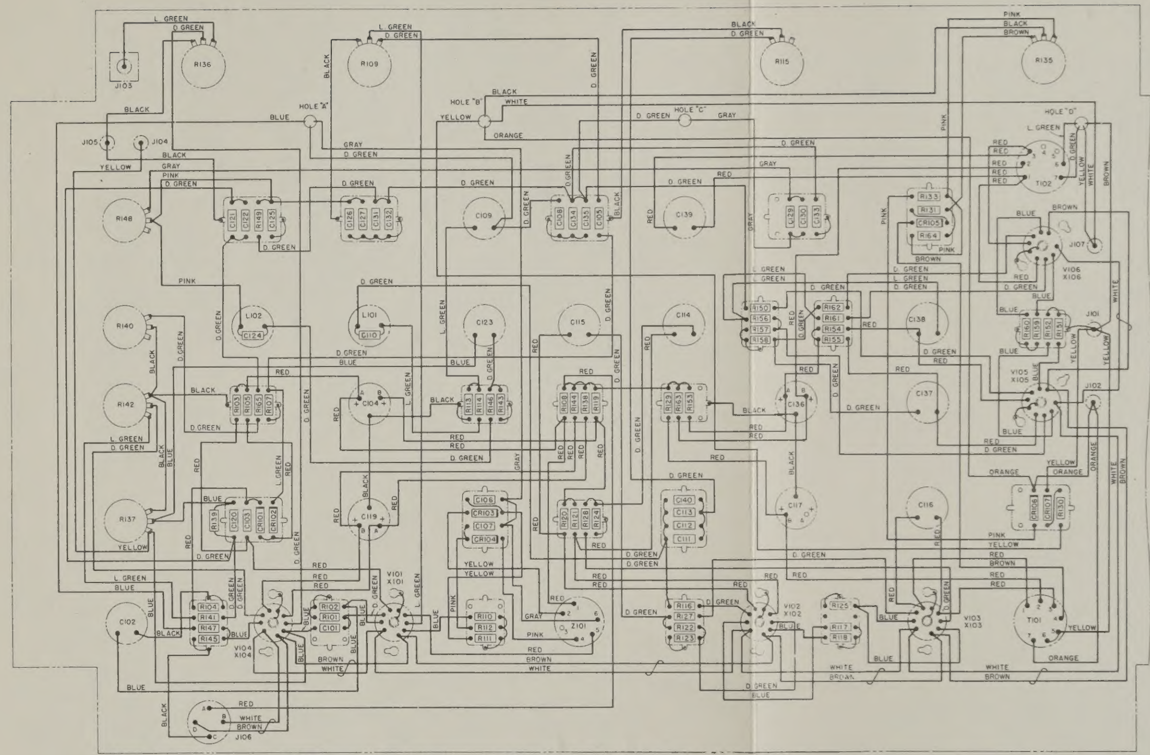

WIRING BELOW TUBE DECK

SYMBOL IDENTIFICATION TABLE					
MULTIPLIERS FOR RESISTANCE VALUES: K=1000 M=1,000,000					
SYMBOL NO	DRAWING NO	DESCRIPTION	SYMBOL NO	DRAWING NO	DESCRIPTION
C101	8617	200 µµf	R133	205	360 OHMS
C102	12709	25 µf	R134	201	3.9K OHMS
C103	8618	10,000 µµf	R135	8579	0-100 OHMS
C104A	13928	15 µf	R136	8247	0-500K OHMS
C104B		15 µf	R137	8467	0-25K OHMS
C105	8618	10,000 µµf	R138	201	10K OHMS
C106	8618	10,000 µµf	R139	201	5.1K OHMS
C107	8618	10,000 µµf	R140	8247	0-500K OHMS
C108	8618	10,000 µµf	R141	201	75K OHMS
C109	12709	25 µf	R142	8467	0-25K OHMS
C110	8618	10,000 µµf	R143	201	2M OHMS
C111	8618	10,000 µµf	R144	201	10K OHMS
C112	8618	10,000 µµf	R145	201	20K OHMS
C113	8618	SEE NOTE #3	R146	205	100K OHMS
C114	12709	25 µf	R147	201	24K OHMS
C115	12709	.25 µf	R148	8247	0-500K OHMS
C116	15763	.25 µf	R149	205	1M OHMS
C117A	13928	15 µf	R150	201	51 OHMS
C117B		15 µf	R151	201	2.4K OHMS
C118	16143	1000 µf	R152	201	3K OHMS
C119A	13928	15 µf	R153	201	10K OHMS
C119B		15 µf	R154	201	220K OHMS
C120	8618	2700 µµf	R155	201	220K OHMS
C121	8618	5100 µµf	R156	201	1.8M OHMS
C122	8618	SEE NOTE #3	R157	201	110K OHMS
C123	12709	25 µf	R158	201	1.8M OHMS
C124	8618	10,000 µµf	R159	201	1.8K OHMS
C125	8618	10,000 µµf	R160	201	1.8K OHMS
C126	8618	10,000 µµf	R161	201	51 OHMS
C127	8618	10,000 µµf	R162	201	51 OHMS
			R163	201	5.1K OHMS
C129	8617	SEE NOTE #3	R164	201	100 OHMS
C130	8618	1800 µµf	R165	201	100K OHMS
C131	8618	10,000 µµf			
C132	8618	10,000 µµf			
C133	8618	10,000 µµf	CR101	15534	IN34A RECTIFIER
C134	8618	10,000 µµf	CR102	15534	IN34A RECTIFIER
C135	8618	10,000 µµf	CR103	15534	IN34A RECTIFIER
C136A	13928	15 µf	CR104	15534	IN34A RECTIFIER
C136B		15 µf	CR105	13910	IN34A
C137	12709	.25 µf	CR106		MATCHED PAIR
C138	12709	.25 µf	CR107	16326	IN54A RECTIFIER
C139	15763	.25 µf			
C140	8617/8630	SEE NOTE #3			
			J101	12921	TEST JACK
			J102	13152	TEST JACK
R101	201	2M OHMS	J103	11338	UG-290/U
R102	201	680 OHMS	J104	13152	TEST JACK
R103	201	51K OHMS	J105	12921	TEST JACK
R104	201	7.5K OHMS	J106	12425	RECEPTACLE ASSEM
R105	201	510K OHMS	J107	13152	TEST JACK
R107	201	7.5K OHMS	L101	16313	FILTER CHOKE (125H)
R108	201	10K OHMS	L102	16313	FILTER CHOKE (125H)
R109	8247	0-500K OHMS			
R110	201	2K OHMS	M101	16312	METER
R111	201	51K OHMS			
R112	201	51K OHMS	S101	16311	5 POSITION 3 SECTION
R113	201	2M OHMS	S102	16314	3 POSITION, 1 SECTION
R114	205	100K OHMS			
R115	8467	25K OHMS	T101	16389	TRANSFORMER
R116	201	51 OHMS	T102	16389	TRANSFORMER
R117	201	12K OHMS			
R118	201	3K OHMS	V101	5670	VACUUM TUBE
R119	201	10K OHMS	V102	5670	VACUUM TUBE
R120	201	220K OHMS	V103	5670	VACUUM TUBE
R121	201	220K OHMS	V104	5670	VACUUM TUBE
R122	201	18M OHMS	V105	5670	VACUUM TUBE
R123	201	110K OHMS	V106	5670	VACUUM TUBE
R124	201	18M OHMS			
R125	201	910 OHMS	X101	15230	9 PIN SOCKET
			X102	15230	9 PIN SOCKET
R127	201	51 OHMS	X103	15230	9 PIN SOCKET
R128	201	51 OHMS	X104	15230	9 PIN SOCKET
R129	201	5.1K OHMS	X105	15230	9 PIN SOCKET
R130	201	SEE NOTE #3	X106	15230	9 PIN SOCKET
R131	203	360 OHMS			
R132	201	7.5K OHMS	Z101	13374	DISCRIMINATOR ASSEM

NOTES:
1. FOR SCHEMATIC DIAGRAM SEE DRAWING #16322.
2. FOR MAIN ASSEMBLY SEE DRAWING #16320.
3. THE FOLLOWING COMPONENTS ARE TO BE INSTALLED AT TIME OF FINAL ADJUSTMENT:

SYMBOL NO.	SELECT ONE OF THE FOLLOWING VALUES	INSTALL AT TIME OF WIRING
C113 (µµf)	1300, 1500, 2200, 3000, 4300, 5100, 5600, 6200, 6800, 7500.	NONE
C122 (µµf)	4300, 5100, 6200	5100
C129 (µµf)	0, 100, 200,	100
C140 (µµf)	0, 100, 200, 390, 510	NONE
R130 (OHMS)	0-2.7K, NEAREST RMA VALUE	NONE

4. ALL WIRES MARKED WITH COLOR NOTE ARE #22 SOLID COPPER; WIRE SPECIFICATION #9275.
5. UNMARKED WIRES ARE BARE #22 TINNED SOLID COPPER.
6. HEATER WIRING (WHITE-BROWN) SHALL BE TIGHTLY TWISTED AS INDICATED THUS: AND SHALL LIE NEXT TO CHASSIS.
7. KEEP A MINIATURE SOCKET WIRING PLUG IN EACH TUBE SOCKET DURING WIRING OPERATION.
8. SHADED AREA ON CRYSTALS INDICATES BANDED END.

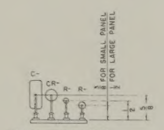

LOCATION OF COMPONENTS
ON RESISTOR PANELS.

TM6625-609-14-3

Figure 3. Signal generator ARC type H-16, wiring diagram.

Figure 3.